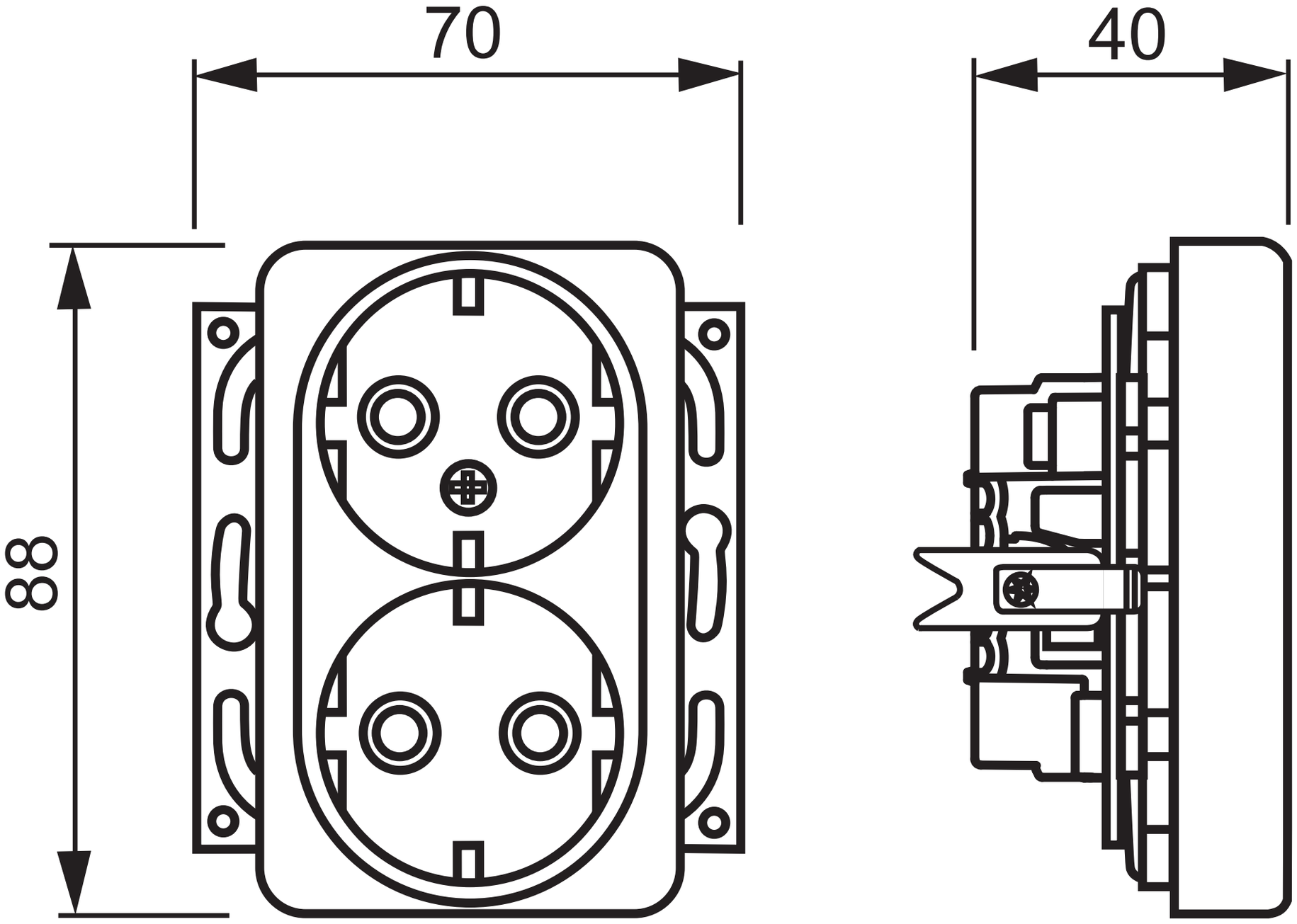
70
40
88