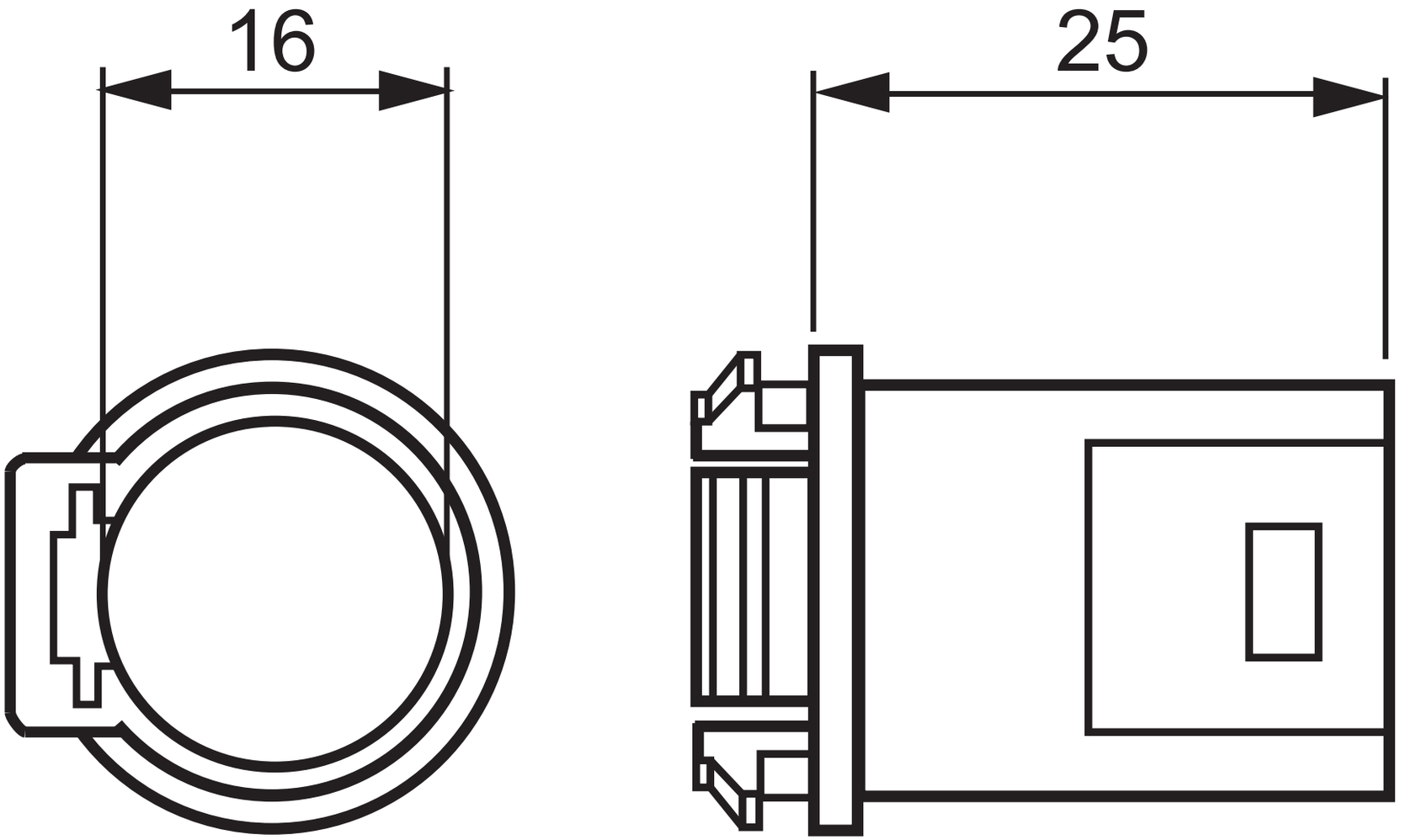
16
25